cabcon CONTACTS

PLUGGABLE TERMINAL BLOCKS

CAMBSW508-SERIES

Pitch 5,08mm

cULus E501953

VDE

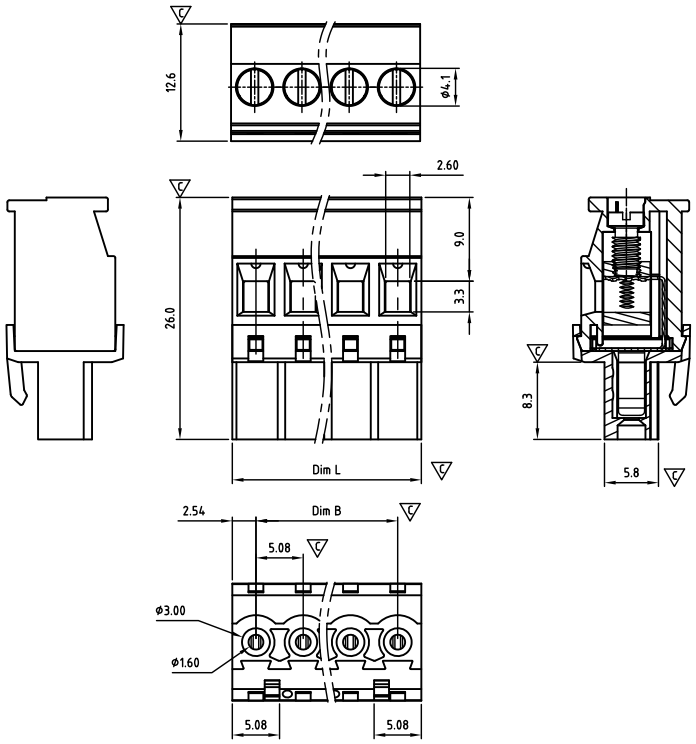

Critical dimension: ▽

Dim.L=Px5.08		
Dim.B=(P-1)x5.08		
P=Number of poles (02-24)		
	Dim B	Dim L
0-30mm	+/- 0,15	+/- 0,20
over 30-60mm	+/- 0,20	+/- 0,25
over 60-90mm	+/- 0,25	+/- 0,30
over 90mm	+/- 0,30	+/- 0,40

Tolerance	
x.	+/- 0,50
x.x	+/- 0,30
x.xx	+/- 0,10
x°	+/-1°
	Units:mm

Technical data

Technical data in accordance with UL/cUL

Use Group	B	C	D
Nominal voltage (V)	300	-	300
Nominal current (A)	15	-	10
Connection capacity(AWG)	30-12	-	30-12

Technical data in accordance with IEC and VDE

Rated insulation voltage at pollution degree 2 (V)	320		
Rated current/conductor cross-section (A/mm²)	12 / 2.5		
Solid/stranded(mm²)	0.2-2.5 / 0.2-2.5		
Surge voltage category/pollution degree	III / 3	III / 2	II / 2
Rated insulation voltage(V)	250	320	630
Rated surge voltage(kV)	4	4	4

General data

Stripping length(mm)	6-7
Screw thread	M3
Tightening torque(Nm)	0.5-0.6
Insulation Withstanding Voltage	AC1600V / 1min
Insulation Resistance	1000MΩ or more at DC500V
Using temperature range	-40°C-115°C

Materials

Insulation material group	PA 66 I UL94 -V0
Wire guard	PhBz, Tin plated
Cage	Brass, Ni plated
Screw	Steel, Zn plated

Packing information

Poles	Order Number	SPQ
2	CAMBSW50802x000	250
3	CAMBSW50803x000	165
4	CAMBSW50804x000	130
5	CAMBSW50805x000	110
6	CAMBSW50806x000	90
7	CAMBSW50807x000	84
8	CAMBSW50808x000	80
9	CAMBSW50809x000	70
10	CAMBSW50810x000	55
11	CAMBSW50811x000	55
12	CAMBSW50812x000	55
13	CAMBSW50813x000	50
14	CAMBSW50814x000	45
15	CAMBSW50815x000	35
16	CAMBSW50816x000	35
17	CAMBSW50817x000	35
18	CAMBSW50818x000	35
19	CAMBSW50819x000	35
20	CAMBSW50820x000	35
21	CAMBSW50821x000	25
22	CAMBSW50822x000	25
23	CAMBSW50823x000	25
24	CAMBSW50824x000	25

Ordering code

CAMB SW 508 xx x xxx
① ② ③ ④ ⑤ ⑥

① Type
② Product style
③ Pitch
④ Poles (02-24)
⑤ Color
⑥ Standard 000 or Custom XXX

Color

0	Black	5	Green
1	Brown	6	Blue
2	Red	G	Pale grey
3	Orange	8	Dark grey
4	Yellow	9	White

Key Commercial data

Custom tariff number	8536901000
Country of origin	CN (China)

Mating with headers

CAHAAH508 Series

CAHAAV508 Series

CAHABH508 Series

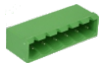

CAHABV508 Series

CAHAEH508 Series

CAHAEV508 Series

Lead Free | RoHS Compliant 2011/65/EU | 5,08 mm | 15A IEC | 320V IEC | 2,5 mm² | 0°